AirportLightingCompany
An ISO 9001:2015 Certified Company

OWNER'S MANUAL



I-Lux LED
LED Board, Low Voltage Controller, Styles 1, 2, 3, 5

AirportLightingCompany
An ISO 9001:2015 Certified Company

I-Lux LED
FAA LED-V2
Styles 1, 2, 3, 5

ETL Certified to:
FAA AC 150/5345-44 and EB 67

Note: For ICAO & TP312 compliant signs reference their specific manuals available on the website.



Manufactured by:
Airport Lighting Company
108 Fairgrounds Drive
Manlius, New York 13104
(315) 682-6460

Email: info@airportlightingcompany.com
Website: www.airportlightingcompany.com

DATA SHEET

AirportLightingCompany
An ISO 9001:2015 Certified Company

I-LUX

All FAA Sizes, FAA Types
and FAA Styles are available in LED



Compliances (Current Editions)

FAA: AC 150/5345-44; Engineering Brief No. 67, ETL Certified

Intertek

Key Features

- The average LED life is 100,000 hours high intensity / 180,000 hours under typical operating conditions.
- Easily replace traditional L-858 signs
- Solidly & seamlessly integrate off-the-shelf parts and custom fabrication for strength & flexibility while minimizing operating costs
- Platform for cabinet machined from solid, heavy-gauge aluminum construction
- Free of gaps and joints that weaken modular signs and allow penetration of wind, rain, dirt and snow
- Inherently stronger than modular signs because it doesn't rely on the strength of hardware used to piece modular signs together
- I-Lux is as short as possible because it is made per FAA lettering specifications & not artificially lengthened over seams and gaps
- ALC's I-Lux is the only airfield sign available in half module sizing
- Quick and economical installation, with smaller excavation, less concrete, and fewer legs to bolt to the pad
- Smaller obstruction in the field than modular signs, presenting less inertial load on aircrafts should a collision occur
- Seamless panels display messages without distortion
- Highly impact resistant, up to 30 times more than other brands
- No tools required for re-lamping
- Base model brightness controls use technology that has been proven for years in the field
- All I-LUX Signs utilize two (2) tethers

Specifications

General Catalog Numbers

I□□□□.□□F□

Size
1 = Size 1
2 = Size 2
3 = Size 3
4 = Size 4
5 = Size 5

Style
1 = Style 1 (120-240VAC)*
2 = Style 2 (4.8A-6.6A)
3 = Style 3 (2.8A-6.6A)
4 = Style 4 (unlighted)
5 = Style 5 (5.5A)

Light Option
H=LED Board
N=Unlighted

Modules
1.0 = 1.0 Module
1.5 = 1.5 Modules
2.0 = 2.0 Modules
2.5 = 2.5 Modules
3.0 = 3.0 Modules
3.5 = 3.5 Modules
4.0 = 4.0 Modules

Faces
S = Single Face
D = Double Face

Options
1 = On/Off Switch
3 = Mode 3**
(If blank: Mode 2)
S = LED Light Out Indicator
P = View Port
E = External Power Cord*

**Not ETL Certified*

Example: I32H3.0SF1 is a size 3 L-858 I -Lux sign in style 2, with an LED light option, 3.0 modules, single face, mode 2 with an on/off switch

***Mode 3 is available for Sizes 2, 3, 4, & 5*

Replacement Parts (LED Light Option)

Part Number	Description
C7-LVCV2	Low Voltage Power Control Module
I7-LEDV2	LED board with optics
C7-DRVR	LED Driver Module
C7-BRG	Bridge Rectifier
I7-120PA1D	120-240V Power Supply, Voltage Driven
C7-VLVC	120V-48VDC Power Supply, Voltage Driven
C7-SOLA	Comm Adapter, Voltage Driven
120-CBLG	Power Cord, 60", Voltage Driven
22-00080	I-LUX Tether (2 per Sign)

Style 1 Power Specifications

Size	Modules	Watts	VA	PF
1	1	7	15	0.48
1	1.5 - 2	12	22	0.53
1	2.5 - 3	16	29	0.56
1	3.5 - 4	21	36	0.59
2	1	12	22	0.54
2	1.5 - 2	21	36	0.59
2	2.5 - 3	30	48	0.62
2	3.5 - 4	41	63	0.65
3	1	16	29	0.57
3	1.5 - 2	30	48	0.61
3	2.5 - 3	45	69	0.65
3	3.5 - 4	59	89	0.66

I-Lux Size 4 (LED Board Light Option)

Style	Modules	L-830 Transformer*	Primary Power Factor	Primary VA Load	Secondary Power Factor	Secondary VA Load
2	1.0	65W	49	.94	49	.94
3	1.0	65W	44	.94	44	.94
5	1.0	65W	44	.94	44	.94

Specifications

Transformer Requirements: LED Board

Size	Style	Modules	L-830 Transformer*	Primary Power Factor	Primary VA Load	Secondary Power Factor	Secondary VA Load	# of LEDs
1	2	1.0	65W	0.94	41	0.95	27	2
1	2	1.5 & 2.0	65W	0.95	45	0.94	32	4
1	2	2.5 & 3.0	65W	0.95	49	0.94	35	6
2	2	3.5 & 4.0	65W	0.95	54	0.94	40	8
2	2	1.0	65W	0.95	45	0.95	32	4
2	2	1.5 & 2.0	65W	0.95	54	0.94	40	8
2	2	2.5 & 3.0	65W	0.94	63	0.93	50	12
3	2	3.5 & 4.0	100W	0.93	75	0.92	60	16
3	2	1.0	65W	0.94	48	0.94	36	6
3	2	1.5 & 2.0	65W	0.94	64	0.93	51	12
3	2	2.5 & 3.0	100W	0.93	78	0.92	65	18
5	2	3.5 & 4.0	100W	0.93	93	0.92	79	24
1	2	1.0	65W	0.94	41	0.95	27	2
1	3	1.5 & 2.0	65W	0.95	45	0.94	32	4
1	3	2.5 & 3.0	65W	0.95	49	0.94	36	6
1	3	3.5 & 4.0	65W	0.95	54	0.94	41	8
2	3	1.0	65W	0.95	45	0.95	31	4
2	3	1.5 & 2.0	65W	0.94	54	0.94	41	8
2	3	2.5 & 3.0	100W	0.93	64	0.93	49	12
2	3	3.5 & 4.0	200W	0.92	78	0.92	62	16
3	3	1.0	65W	0.94	48	0.94	36	6
3	3	1.5 & 2.0	100W	0.93	64	0.93	50	12
3	3	2.5 & 3.0	200W	0.92	82	0.92	65	18
3	3	3.5 & 4.0	200W	0.92	96	0.92	79	24
5	3	1.0	65W	0.95	32	0.94	23	2
1	3	1.5 & 2.0	65W	0.95	37	0.94	27	4
1	5	2.5 & 3.0	65W	0.94	41	0.93	32	6
1	5	3.5 & 4.0	65W	0.94	46	0.93	37	8
1	5	1.0	65W	0.95	37	0.94	28	4
2	5	1.5 & 2.0	65W	0.94	47	0.93	37	8
2	5	2.5 & 3.0	65W	0.93	56	0.92	46	12
2	5	3.5 & 4.0	100W	0.93	67	0.91	57	16
2	5	1.0	65W	0.93	67	0.91	57	6
3	5	1.5 & 2.0	65W	0.93	57	0.92	47	12
3	5	2.5 & 3.0	100W	0.92	71	0.91	62	18
3	5	3.5 & 4.0	100W	0.92	85	0.91	76	24

**Minimum*

L-858 D-Lux & I-Lux Sign Options

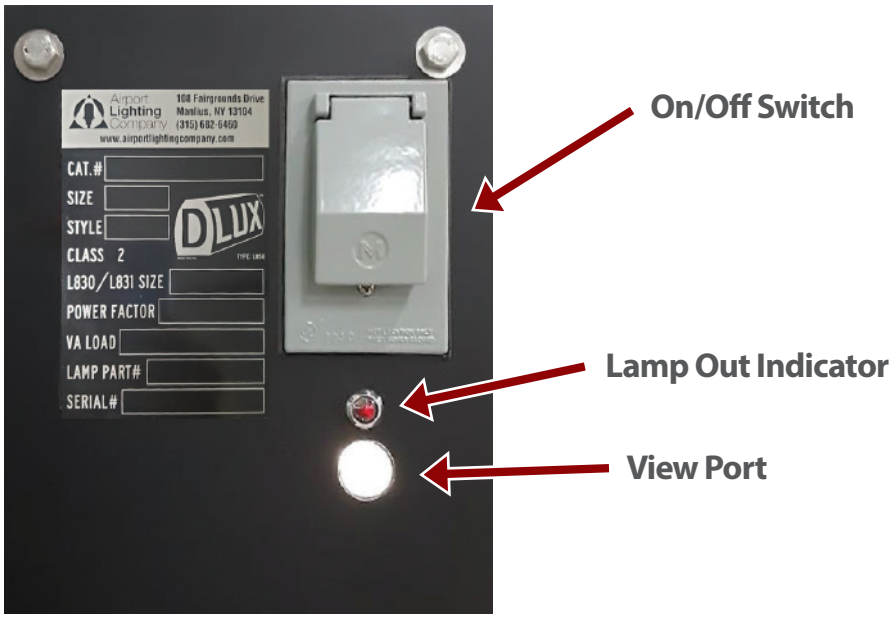

(placement of devices may vary depending on Sign Type and Size)

On/Off Switch, Option 1 – Part Number D7-SWA, I7-SWA, I7-SWA-4

The Isolating Safety Switch allows the guidance sign power control and circuitry to be isolated from the airfield constant current regulator (CCR) circuit, providing a greater measure of safety when performing maintenance. This allows the rest of the airfield circuitry to remain illuminated to maintain necessary visual guidance to pilots. The isolating switch is a IP67 rated, 15A bat style toggle switch and includes a weatherproof cover that provides additional protection against mechanical damage. I7-SWA-4 will only be used on I-LUX Size 4 signs.

Lamp Out Indicator, Option S – Part Number C7-CBLOI

The Lamp Out Indicator is designed to aid maintenance staff in determining if a sign is not operating within specification. The C7-CBLOI will consist of a LED monitor circuit board and Indicator LED. C7-CBLOIH36 wire harness will be used in conjunction with the C7-CBLOI on D-LUX signs. Per the FAA Engineering Brief 67D, system must turn off upon 25% failure of LEDs. The Red Lamp Out Indicator will illuminate if the 25% has been exceeded and the sign is out. This will alert maintenance so that the LEDs within the sign can be addressed.

View Port, Option P – Part Number C8-WPLG

The View Port is designed to aid maintenance staff in detection that the sign is lit. This small transparent poly-carbonate plug is placed on the end of the sign closest to the pavement so that you can easily see when passing by that sign that the lights are on.

Weights and Dimensions

Sign Size	Modules	Length (Inches)	Width (Inches)	Height (Inches)	Weight (Pounds)
1	1.0	33	11	31	55
1	1.5	48	11	31	83
1	2.0	63	11	31	110
1	2.5	78	11	31	138
1	3.0	93	11	31	165
1	3.5	108	11	31	193
1	4.0	119	11	31	218
1	4.0x	123	11	31	220
2	1.0	39	11	37	68
2	1.5	57	11	37	101
2	2.0	75	11	37	134
2	2.5	93	11	37	168
2	3.0	111	11	37	201
2	3.5	129	11	37	235
2	4.0	145	11	37	265
2	4.0x	147	11	37	268
3	1.0	46	11	43	90
3	1.5	67	11	43	135
3	2.0	88	11	43	180
3	2.5	110	11	43	225
3	3.0	131	11	43	270
3	3.5	152	11	43	315
3	4.0	170	11	43	358
3	4.0x	173	11	43	360
4	1.0	62	11	56	135
5	1.0	33	11	43	66

TABLE OF CONTENTS

AirportLightingCompany
An ISO 9001:2015 Certified Company

How to Get Help 1

Warranty 2

General Information 3
- Sign Dimensions 4
- Sign Handling 5
- Sign Storage 5

Installation 6

Maintenance 7
- Sign Maintenance 7
- Cabinet Access 8

Troubleshooting 9
- Board Operation 9
- Board Troubleshooting 9
- Board Replacement 11

Parts List 12
- Current Driven Signs 12
- Voltage Driven Signs 13
- Parts List 14

Mounting Information 15
- Pad Mounting Guide 15

Isolating Safety Switch with Cover 16

Notes 17

Have Questions? Contact Us:

GENERAL INQUIRY: (315) 682-6460

EMAIL: info@airportlightingcompany.com

TECHNICAL SUPPORT: (866) 212-1060

EMAIL: support@airportlightingcompany.com

WEBSITE: www.airportlightingcompany.com

AirportLightingCompany
An ISO 9001:2015 Certified Company

108 Fairgrounds Drive
Manlius, New York 13104

Statement of Warranty

Airport Lighting Company L858 Airfield Guidance Signs are warranted against mechanical and physical defects in design or manufacture for a period of 2 years from date of installation per FAA AC 150/5345-44(applicable edition). Where applicable, per FAA EB67(applicable edition), ALC L858(L)Airfield Guidance Signs are warranted against electrical defects in design or manufacture of the LED or LED specific circuitry for a period of 4 years. ALC will correct such by repair or replacement, at its option, provided the signs have been properly handled and stored prior to installation, properly installed and operated after installation, and provided further that the buyer has notified ALC in writing within the warranty period and a reasonable time after notice of such defects. Refer to handling, storage, installation and operational instructions for proper procedural guidance that must be followed to maintain warranty provisions.

This warranty is in effect for the specified term as long as the equipment has not been, in ALC's judgment: altered in such a way as to affect the equipment adversely; subjected to accident, negligence, and/or improper storage; and has been operated and maintained in accordance with accepted FAA guidelines as described in AC 150/5340-26(applicable edition) and ALC's published operational guidelines.

ALC reserves the right to examine signs on which a claim has been made. Equipment must be presented in the same condition as when the defect was discovered. ALC also reserves the right to require the return of equipment to establish any claim.

Disclaimer: Airport Lighting Company's obligation under this warranty is limited to repair or replacement of defective equipment sold by ALC. This does not include any other costs such as the cost of removal, shipping, or installation of the defective part or repaired product, including labor or any consequential damages of any kind. ALC shall not be liable for any indirect or consequential damages.

Under no circumstances will ALC's liability exceed its sales price of the signs claimed to be defective. All transportation costs under this warranty are the responsibility of the buyer. Replacement parts and/or equipment provided under this warranty are covered under the same terms until the expiration of the original warranty period that began upon the first installation of the equipment.

This is ALC's sole and exclusive warranty with respect to the equipment sold to the buyer. There are no express or implied warranties of fitness for any particular purpose or any implied warranties other than those made expressly herein.

ALC shall not be liable to the buyer of this product or third parties for indirect or consequential damages, or for damages arising from the use of any options or parts other than those designated by ALC as approved products. Damage caused by lightning, flood and other natural or man-made causes are outside the scope of this warranty.

All ALC signs are tested at the factory and set to function within applicable specifications. Installation and operation issues most frequently trace back to an undersized isolation transformer or to damage during shipping. Before commencing repairs, please contact Airport Lighting Company ((315) 682-6460 or via email) with the catalog number and serial number from the name plate of the malfunctioning sign to determine warranty coverage.

If following the troubleshooting guidelines below does not resolve the operational issues, we are pleased to assist you via telephone or email. We keep parts in stock, and ship within 24 hours.

Power factors, as illustrated on page 15, are measured on the primary of the corresponding L830 transformer, per FAA Circular 150/5345-44(current edition). This takes into account the inherent deficiencies of the isolation transformer in the values. These ratings are subject to change without notice.

Consider upgrading your MR16 signs to energy efficient LED signs. ALC has retrofit kits for just that purpose – no need to purchase a whole new sign. Please contact ALC to learn more about the possibilities. Additional information is available on our website: www.airportlightingcompany.com.

I-Lux Sign Dimensions

Sign Size	Legend Size	Viewable Panel Height	Panel Height	Overall Sign Height
1	12"	18"	19.875"	27"
2	15"	24"	25.875"	33"
3	18"	30"	31.875"	39"
4	40"	48"	50"	56.5"
5	25"	30"	31.875"	39"

Size 1

1.0 Mod

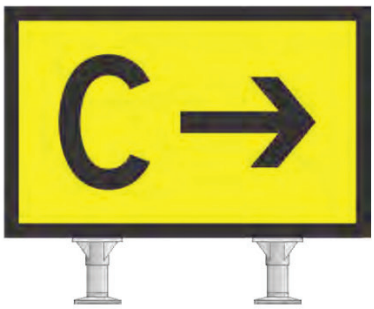

Size 2

1.5 Mod



Size 3

2.0 Mod



Size 4

1.0 Mod



I-Lux Sign Handling

Airport Lighting Company I-Lux signs are shipped in a corrugated wrapping to protect against abrasion during shipping. The packaged signs are meant to be hand carried (sling straps are effective) or placed on dolly carts. The packaged sign is NOT designed to be handled by forklifts.

Make sure to note any damage that occurred during shipping when receiving the signs and be sure to document it with the carrier. When installing the sign make sure that the correct L830 isolation transformer is connected. When accessing the sign cabinet, use only hand tools to tighten the bolts.

I-Lux Sign Storage

If the signs are to be stored before installation, keep them in the original corrugated wrapping for protection and store them upright in a dry location. If the corrugated wrapping becomes wet, it should be removed and recycled because it can cause damage as a result of aggravated humidity. If the corrugated wrapping is removed, keep the protective plastic on the legend panels until installation. This provides the last layer of protection in the absence of the corrugated wrapping. Damage resulting from improper storage is not covered by warranty.

Installation

1. Place sign on the pad with long dimension of the floor flanges perpendicular to the length of the sign.
2. Mark anchor bolt locations.
3. Move the sign out of the way.
4. Drill mounting holes for anchor bolts.
5. Install properly sized L-830 transformer into base can or ensure proper 120-240VAC cable is present.
    - Check the name plate on the side of the sign to ensure correct wattage is used.
6. Secure cable clamp to transformer secondary lead or secondary extension cord.
7. Reposition the sign on the pad and hold at an angle.
8. Pull power cord out of sign leg and plug it into the transformer secondary lead or 120-240VAC extension cord.
9. Rotate the sign to the upright position over the anchor holes being careful to not pinch the power cord.
10. Insert the anchor bolts and loosely clamp the floor flanges to the pad.
11. Loosen the pinch bolts in the slip flanges.
12. Tighten the anchor bolts on the floor flanges.
13. Tighten the pinch bolts in the slip flanges against the couplings.
14. Remove the protective plastic on the panels, being careful not to create foreign object debris (FOD).
15. When work is done on the circuit, verify sign operation between dusk and dawn.

I-Lux Sign Maintenance

Airport Lighting Company signs are designed to provide years of trouble-free service. Prior to the performance of any work on the signs, power should be disconnected at the vault. We recommend an annual inspection and cleaning of the sign interior to maintain bright and even light output. Inspection of the signs should also include regular removal of any excess dirt, snow, and avian excrement from the sign exterior to maintain proper visibility of the sign legend.

I-Lux Cabinet Access

1. Using a 7⁄16" socket, remove the bolts from the top and bottom of the sign to remove the side extrusion opposite the power end of LED board signs. For all other signs, remove the side extrusion at the power end of the sign.

2. Slide the sign side cabinet extrusion out.

3. Remove a sign panel by sliding it out the open end of the sign.

4. When accessing the sign cabinet, use only hand tools to tighten the bolts.

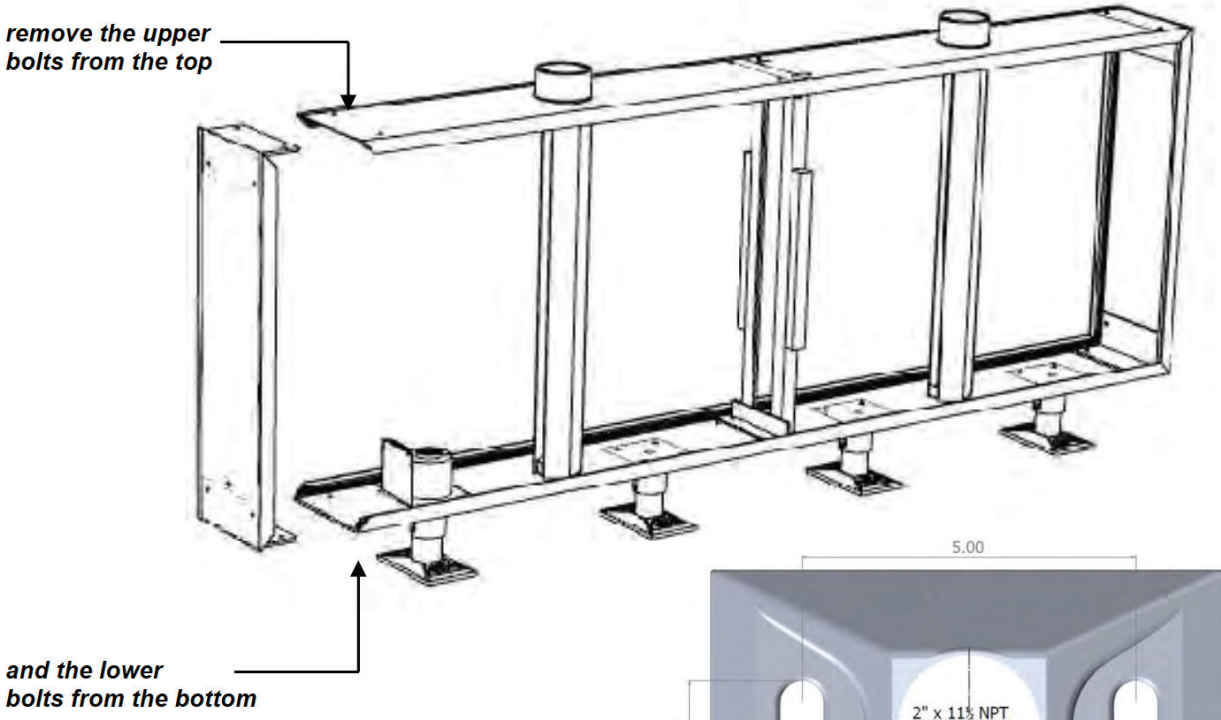

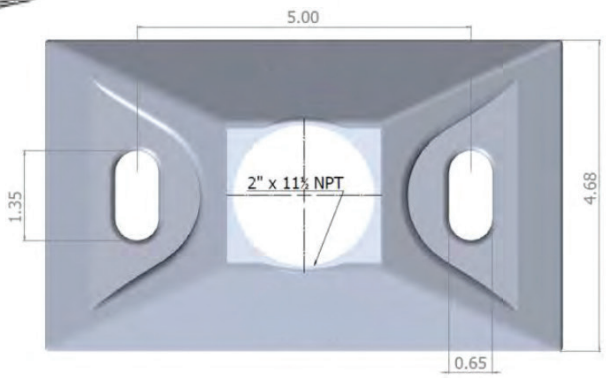

Floor Flange Dimensions

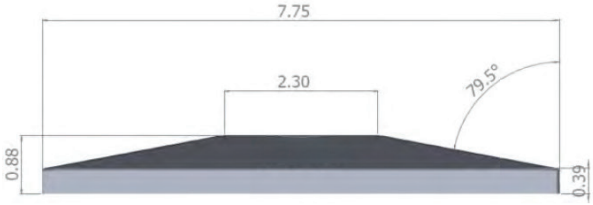

I-Lux LED Board Operation

Airport Lighting Company's LED board light engine uses high efficiency LEDs to illuminate the guidance sign. Once the circuit is energized, there is a 4 second delay before the light engine turns on; this is normal. If there is an interruption in power, there could be another identical delay indicating the startup sequence has cycled. There are 2 high brightness LEDs on each board. Per FAA Engineering Brief #67, if more than 25% of the alternate lighting devices (LEDs) are not lit, the LED board must discontinue operation and communicate its condition within the sign, causing the whole sign to turn off. The FAA requires this to make sure an incorrect message is not displayed that could cause a safety issue to traffic on the airfield. Each LED board has a monitor circuit to verify operation. The LED board that has detected the problem will illuminate a red LED on the board indicating it has a problem and should be replaced.

I-Lux LED Board Troubleshooting

All Airport Lighting Company signs are tested at the factory and set to function within applicable specifications. Installation and operation issues most frequently trace back to an undersized isolation transformer or to damage during shipping. Before commencing repairs, please contact Airport Lighting Company ((315) 682-6460 or via email) with the catalog number and serial number from the name plate of the malfunctioning sign to determine warranty coverage. If the LED boards and isolation transformer appear functional, and any operating issues have not been resolved after following the troubleshooting guidelines, please contact Airport Lighting Company; we will be pleased to assist you. We keep parts in stock and ship within 24 hours.

BEFORE PERFORMING MAINTENANCE ON AN AIRFIELD GUIDANCE SIGN, VERIFY THE SIGN'S CIRCUIT IS OFF AND LOCKED OUT FROM ACCIDENTAL ENERGIZATION.

1. Verify that the amp reading (taken on one of the sign input power cords) reflects the amperage of the airfield circuit. If the reading is not identical, then there could be a problem with the isolation transformer or regulator providing power to the sign. Lock out the circuit and verify the condition of the isolation transformer for the sign.

    a. For Voltage Driven Signs, verify proper 120-24VAC is present. If incorrect, find problem with input voltage source.

2. Ensure that power to the sign has been turned off, then access the I-Lux cabinet by following the instructions on page 9. For easier access to the sign interior, remove one of the panels by sliding it out the open end of the sign and setting it aside.

3. Inspect the LED boards that are mounted on the mounting brackets. Cycle the power to the sign remotely or by using the optional isolating safety switch on the sign. If there is a fault with an individual LED board, all the LEDs should light up and then shut down within a second. The malfunctioning LED board will have an illuminated red LED directly on the circuit board as an indication that it or the driver circuit has malfunctioned.

    a. To isolate the malfunction, remove the end loop plug from the end of the LED circuit where the red light was observed. Disconnect that string of LED boards from the driver and insert the end loop plug in its place on the driver. Cycle the power again and observe whether all remaining lights in the sign illuminate normally.

        i. If all the lights remain on normally, there is a problem with a LED board on the string that was disconnected. Power off the sign, replace the bracket with the malfunctioning LED board, return the end loop to the OUT plug, and connect the LED bracket circuit to the driver again. Power on the sign, verify normal operation, and take the affected bracket back to the shop to isolate the indicated LED board for replacement. Instructions for replacing the LED board are on the following page.

        ii. If all the lights go out again and the red light appears on the remaining string plugged into the driver, then the driver needs to be checked. Power off the sign, unplug the power cable that runs from the power control module (PCM) to that driver, cycle the power to the sign, and confirm the other lights and driver circuits in the sign remain lit. If so, the disconnected driver needs to be replaced and the strings of LEDs connected to the new driver to confirm their operation.

    b. If the remaining driver circuits are still not operational on restart, power off the sign, and unplug all the drivers from the PCM. With all driver circuits unplugged, power up the sign and make sure the PCM has both green LEDs. If one or both green LEDs on the PCMare not illuminated, skip the next step below.

IMPORTANT: DO NOT PLUG DRIVER CIRCUITS INTO AN ENERGIZED LVC POWER SUPPLY WHEN TROUBLESHOOTING!

        i. With the sign powered down, plug in the driver circuits individually and power on the sign to confirm their individual operation. If another driver circuit is found to be causing shut down, repeat the previous steps to isolate the cause.

    c. Next, ensure the bridge rectifier is functioning properly by taking a DC voltage reading across the red and black wires exiting the bridge rectifier. With the circuit off and locked out, note the position of where the wires connect on the terminals and then remove them from the connecting posts of the bridge rectifier. The corners with red and black wires are the DC output of the bridge rectifier. The

positive red (+) wire is always connected to the terminal that is 90° different in orientation than the others and is located on the small diagonal corner of the bridge rectifier.

i. Using an RMS multi-meter, set the operation for diode testing and place the black negative lead on the positive terminal of the bridge rectifier, and the red positive lead on the negative terminal of the bridge rectifier in the corner opposite the positive terminal.

ii. If the meter reads close to 0.90VDC to 1.00VDC the bridge rectifier is good. If it reads approximately 0.40VDC to 0.60VDC the bridge rectifier is bad and needs to be replaced.

d. If the bridge rectifier is good, the next step is to check the output of the PCM. There are 2 green LEDs on the PCM near the output connections and if both of these are not illuminated when the sign is powered on and all circuits are disconnected, the PCM needs to be replaced. If both are illuminated, check the output voltage by setting a true RMS meter to DC voltage, and insert the black negative probe where the green wire connects and the red positive probe where the red wire connects. The output voltage should be approximately +50VDC. If there is no voltage here, the PCM needs to be replaced.

i. After the PCM is replaced, follow the driver circuit checking procedure from the preceding page. Take note of the green LED lights on the PCM; and if on start up, one of the LEDs is not illuminated, turn off the power promptly and replace the driver of the circuit being checked. Do not run a new PCM with a bad driver as damage to the PCM can occur.

I-Lux LED Board Replacement

Replacement of a nonfunctioning LED board is best accomplished inside the electrical shop, after swapping out mounting brackets. To replace the LED board, carefully remove the black wire harness plugs, press on the release safety catches of the plugs and pull out along the same plane that the LED is mounted on. Remove the mounting clips on either side of the LED board. Then using a sharp blade, slide under the LED board and pry the LED board off of the mounting bracket where the LED board is held with thermal transfer adhesive. Make sure to clean the area of the mounting bracket where the LED board was mounted before attaching a new one.

On the replacement LED board, strip the protective cover from the thermal adhesive on the back and carefully place the LED board in the same location as the previous LED board. Make sure to align the IN side and OUT side in the same orientation as the other LED boards on the mounting bracket. Replace the wire harness connections; and if the replacement LED board is at the end of the string, insert the green, end loop plug that completes the circuit.

Current Driven Signs

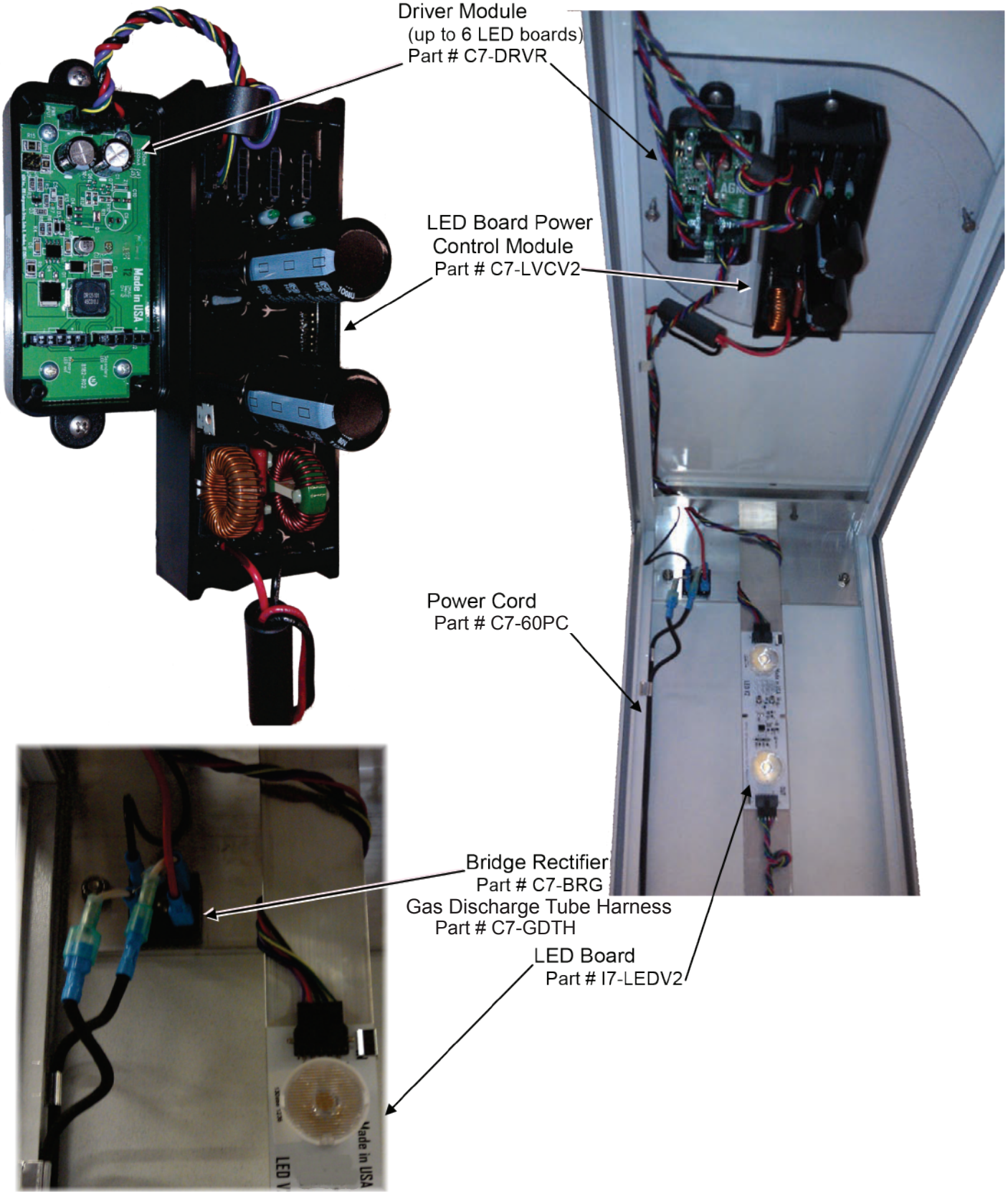

Voltage Driven Signs

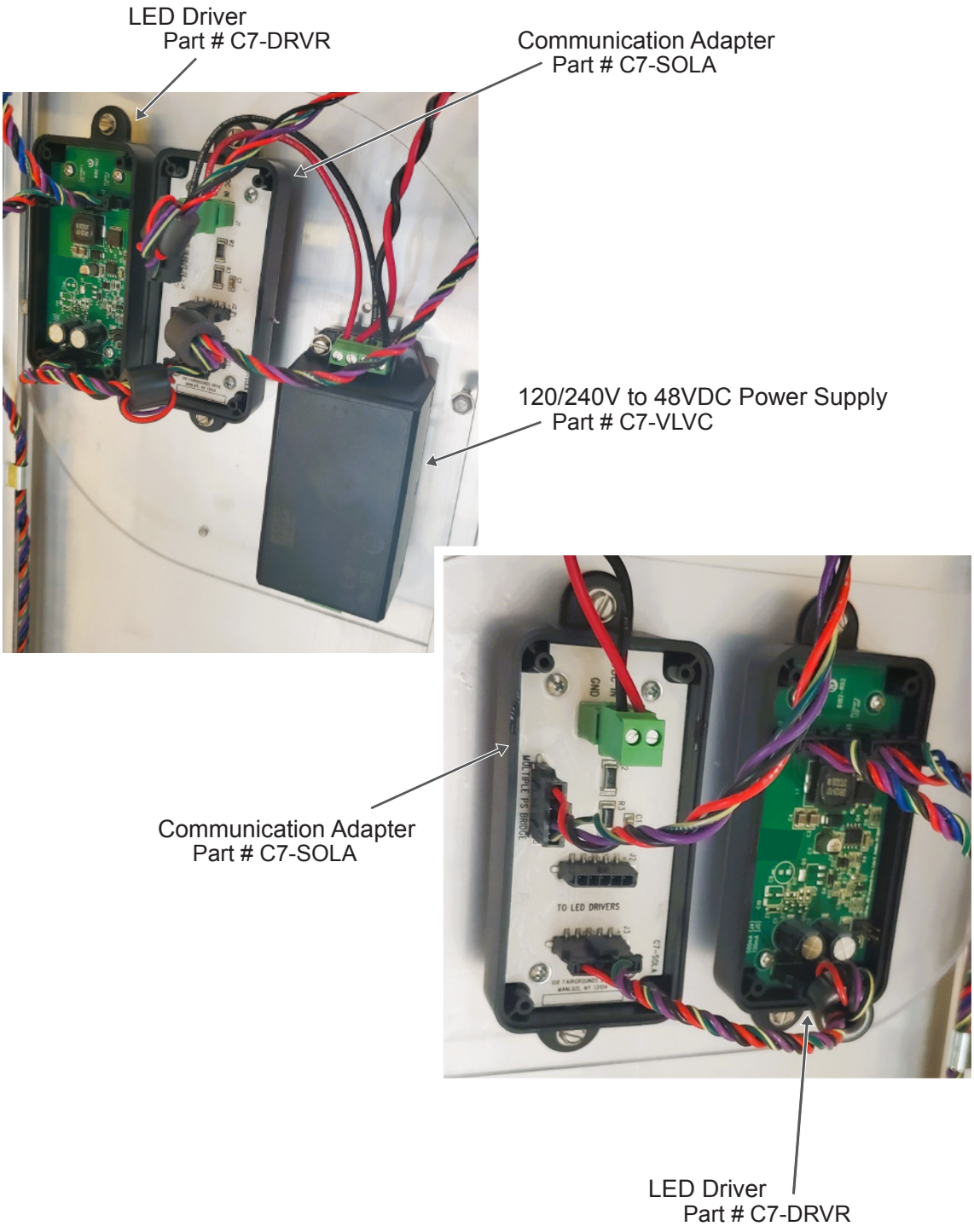

I-Lux LED Board Parts List

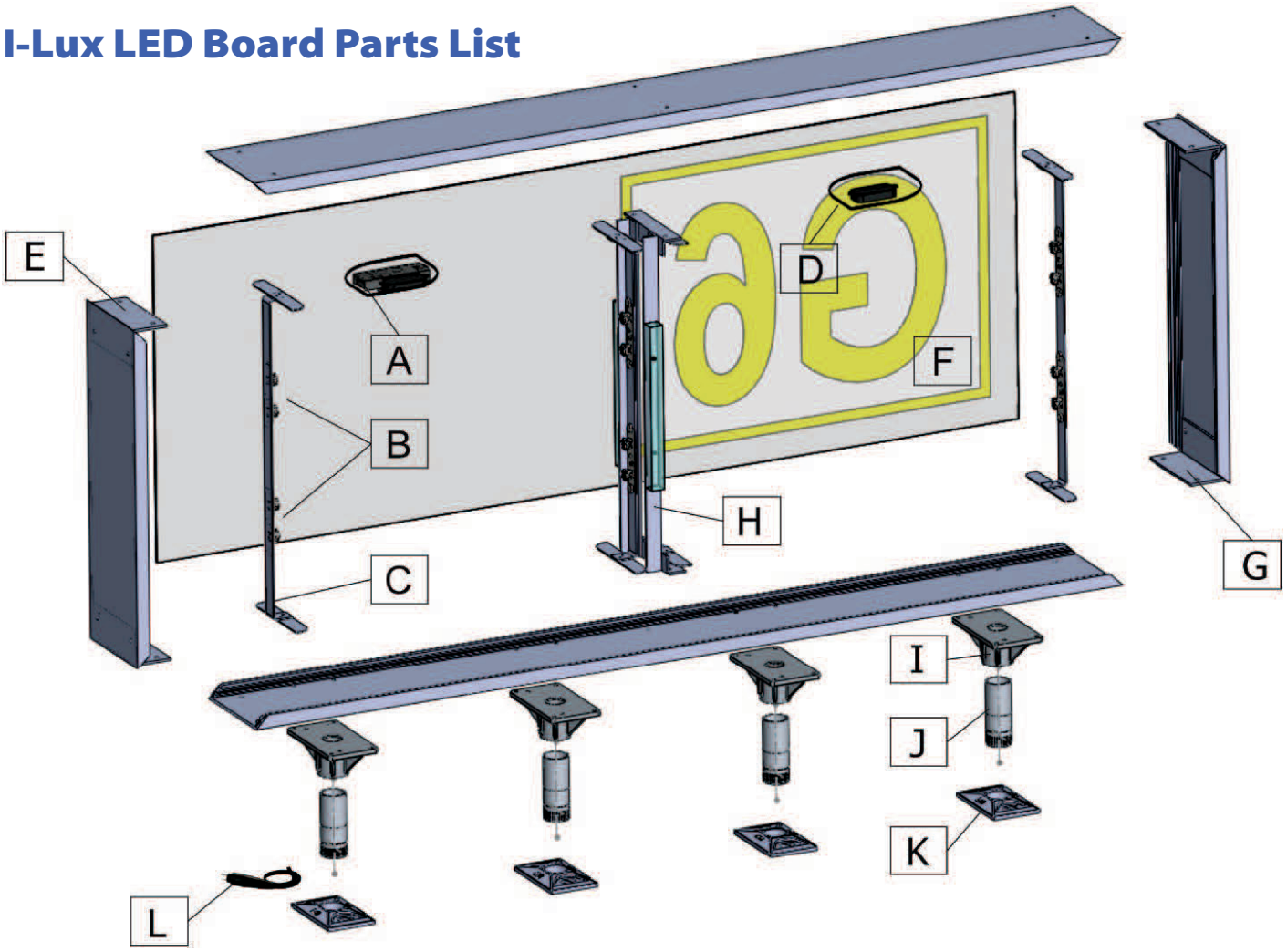

	Part #	Description
A	C7-LVCV2	Low Voltage PCM
B	I7-LEDV2	LED Board with Optics
C	I7-LB#V	LED Mounting Bracket
D	C7-DRVR	LED Driver Module
E	I6-CBT	Corner Bracket
F	I8-#LPXX I8-#BPXX	Legend Panel Blank Panel
G	I6-CB	Corner Bracket with Knurl Nut
H	I6-#SP	Support Post *Size 2 or 3 only*

	Part #	Description
I	C6-SF6	Slip Flange
J	I6-FC#	Frangible Coupling
K	C6-FF235	Floor Flange
L	C7-60PC	Power Cord
	C7-BRG	Bridge Rectifier *Not pictured*
	22-00080	Tether (2 per Sign) *Not pictured*
	C7-VLVC	120V-48VDC Power Supply, Style 1
	C7-SOLA	Comm Adapter, Style 1
	120-CBLG	Power Cord, 60", Style 1 Only

When ordering: # = Sign Size XX = Sign Length

I-Lux Pad Mounting Guide

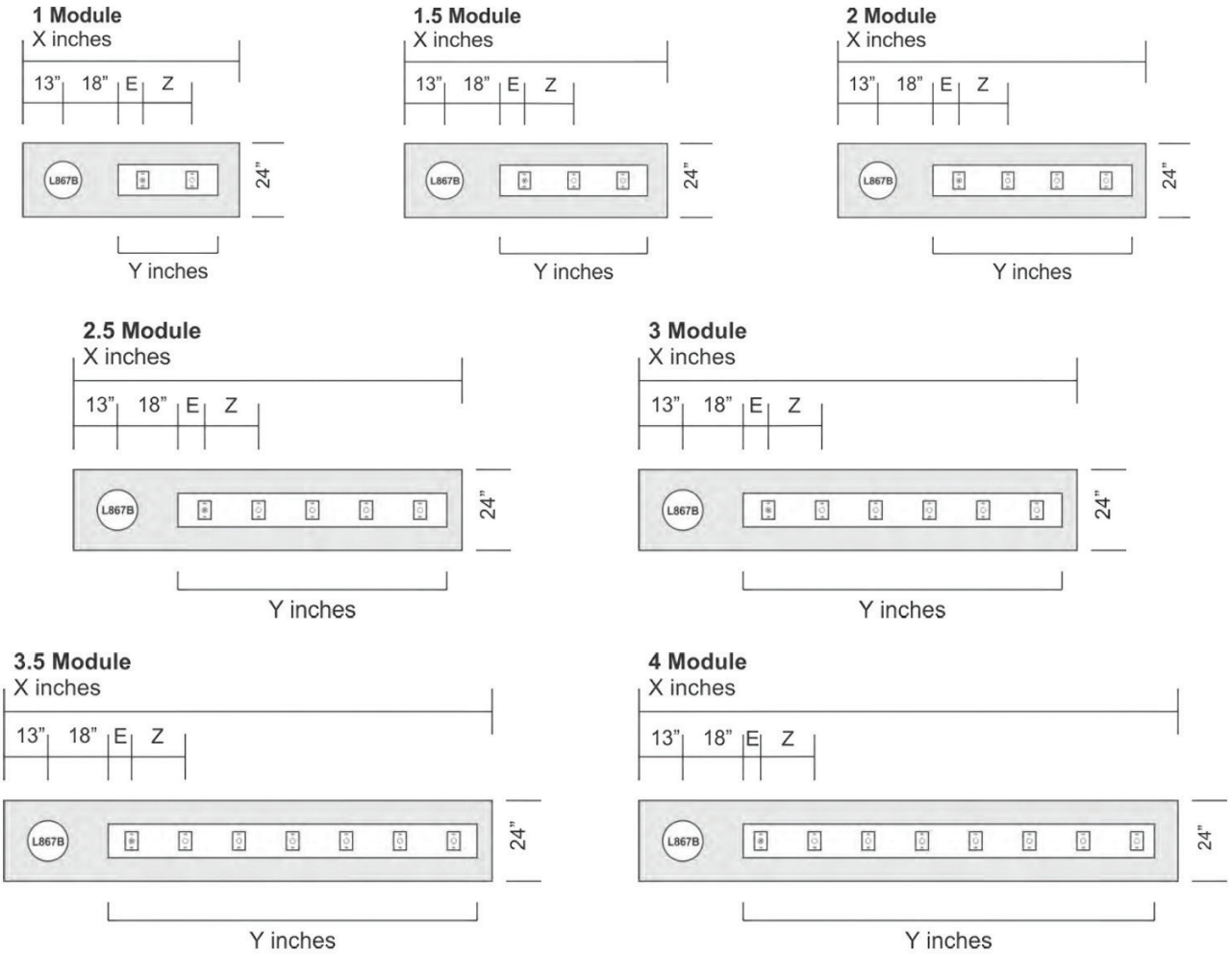

	Leg Spacing	1 Module	1.5 Module	2 Module	2.5 Module	3 Module	3.5 Module	4 Module
Size 1	Z=16	X=70.5 Y=32.5 E=8.25	X=85.5 Y=47.5 E=7.75	X=100.5 Y=62.5 E=7.25	X=115.5 Y=77.5 E=6.75	X=130.5 Y=92.5 E=6.25	X=145.5 Y=107.5 E=5.75	X=160.5 Y=120 E=5.25
Size 2	Z=19	X=76.5 Y=38.5 E=9.75	X=94.5 Y=56.5 E=9.25	X=112.5 Y=74.5 E=8.75	X=130.5 Y=92.5 E=8.25	X=148.5 Y=110.5 E=7.75	X=166.5 Y=128.5 E=7.25	X=184.5 Y=145 E=6.75
Size 3	Z=22.5	X=83 Y=45 E=11.25	X=104.25 Y=66.25 E=10.625	X=125.5 Y=87.5 E=10	X=146.75 Y=108.75 E=9.375	X=168 Y=130 E=8.75	X=189.25 Y=151.25 E=8.375	X=210.5 Y=170 E=7.375
Size 5	Z=16	X=70.5 Y=32.3 E=8.0						

X = suggested concrete pad dimension
Y = sign length
Z = distance between leg centers
E = distance from edge of sign to leg center

Isolating Safety Switch with Cover (I7-SWA)

(optional items I7-SWA)

The Airport Lighting Company isolating safety switch allows the guidance sign power control and circuitry to be isolated from the airfield constant current regulator (CCR) circuit, providing a greater measure of safety when performing maintenance. This allows the rest of the airfield circuitry to remain illuminated to maintain necessary communication to pilots. The isolating safety switch is weatherproof with an IP67 rating and also includes a weatherproof cover that provides additional protection against mechanical damage.



The switch is a double pole double throw (DPDT) style switch. Two terminals are for power to the PCM; two terminals are power from the isolation transformer; and two are the short circuit path.

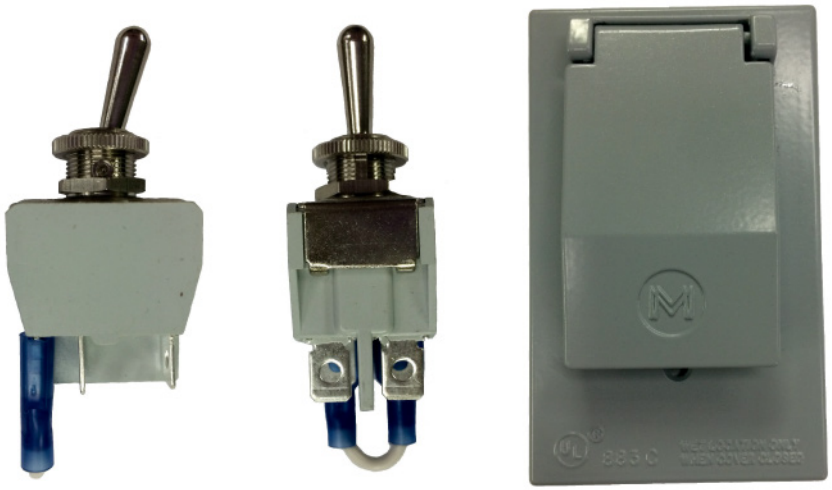

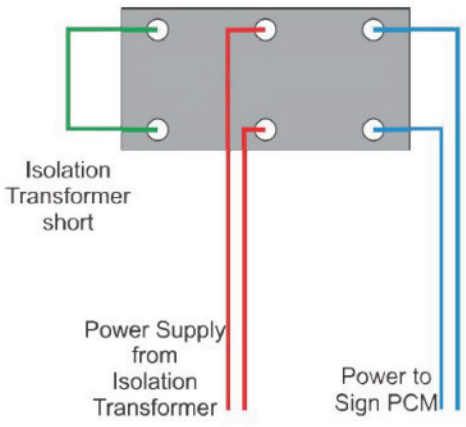

Parts are not sold separately, only as an assembly with the appropriate materials for installation.